ARMATUREN
WOLFF

Electric
Quick-closing Valve Systems

Blackout-safe power supply of several quick-closing valves with one control cabinet

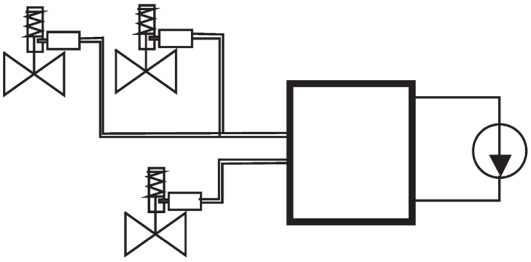

- ✓ **Room-saving dimensions**
- ✓ **Easy and time-saving installation, trouble-free system start-up**
- ✓ **Highest operational safety due to numerous control and alarm functions (with additional external signalisation)**
- ✓ **Very complex plants, high number of quick-closing valves possible**

- ✓ **Voltage supply variable**
- ✓ **Variable grouping of valves**
- ✓ **Highly economic system costs**
- ✓ **Remote release, manual reset**
- ✓ **Uncomplicated refit possible with all ARMATUREN-WOLFF quick-closing valves**

certificates / type approvals

ARMATUREN-WOLFF • Friedrich H. Wolff GmbH & Co. KG
Oehleckerring 29 • 22419 Hamburg - Germany
Tel. +49 (40) 532 87 30
Fax +49 (40) 532 87 329
aw@armaturen-wolff.com
www.armaturen-wolff.com

03.20

ARMATUREN-WOLFF · Friedrich H. Wolff GmbH & Co. KG
Oehleckerring 29 · 22419 Hamburg - Germany
Tel. +49 40 532873-0 · Fax +49 40 532873-29
E-Mail: aw@armaturen-wolff.de · Internet: www.armaturen-wolff.de

ARMATUREN WOLFF

Steuerschrank

Stahl
mit eingebauter USV und Störungsüberwachung zur Fernbedienung von elektrischen Schnellschlussventilen

- Diese Steuerschränke werden je nach Systemanforderung hinsichtlich Batterie, Auslöseschalter, Klemmleiste, USV-Modul und Sammelstörungsmelder ausgelegt und konfektioniert.

Control Locker

steel
with built-in UPS and failure monitoring for remote control of electrically operated quick-closing valves

- *The battery (-ies), release switches, terminal block, UPS and collective fault alarm module are laid out and installed depending on the system requirements in each specific case.*

115 - 230 V AC + 24 V DC

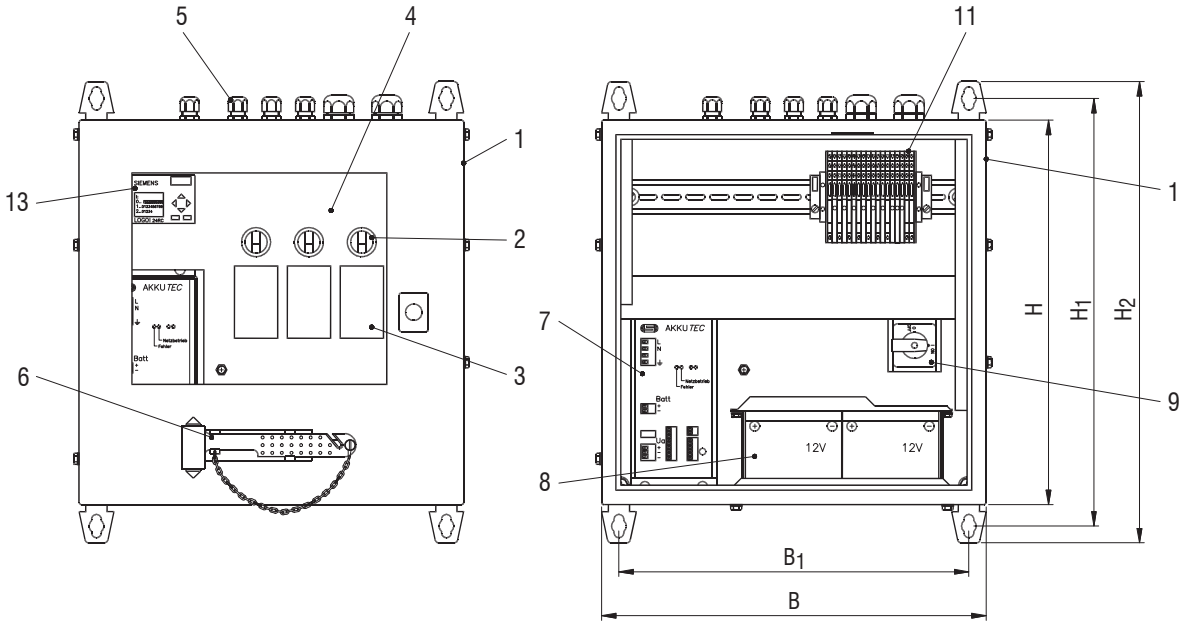

Pos. *item*	Bezeichnung *denomination*	AW **3397**	Pos. *item*	Bezeichnung *denomination*	AW **3397**
1	Steuerschrank / *control locker*	St	7	Haupt-Unterbrechungsschalter / *main power switch*	
2	Montageplatte / *mounting plate*	St	8	Klemmleiste / *terminal block*	
3	Dreh-Kontaktschalter mit Leuchtmelder *release switch with light indicator*		9	Akkumulator (Batterie) / *battery*	
			10	Kabel-Verschraubung / *cable union*	
5	Schilder / *name plates*		11	Sammelstörungsmelder *collective fault alarm mode*	
6	Batteriegepufferte Gleichstromversorgung *battery buffed direct current supply module*		13	Nothammer / *emergency hammer*	

Elektrische Betriebsdaten / *Electric Operating Data*

Leistungsaufnahme / *power consumption* ..... max. ~270 W
Versorgungsspannung / *voltage supply*
- Hauptversorgung / *main power supply* ..... 115 - 230 V AC, 47 - 63 Hz
- Parrallele Fremdeinspeisung / *additional direct external power supply* ..... 24 V DC

Umgebungstemperatur / *ambient temperature* ..... 0 - 45°C (0 - 25°C optimal / *optimum*)
Schutzart / *protection class* ..... IP 22 / DIN EN 60529

H x B	t	B_1	H_1	H_2	≈kg
400 x 400	210	364	445	480	22,5

ARMATUREN-WOLFF · Friedrich H. Wolff GmbH & Co. KG
Oehleckerring 29 · 22419 Hamburg - Germany
Tel. +49 40 532873-0 · Fax +49 40 532873-29
E-Mail: aw@armaturen-wolff.de · Internet: www.armaturen-wolff.de

ARMATUREN WOLFF

Schnellschlussventil PN 16

Sphäroguss, Durchgangsform
federbelastet
Elektrische Auslösung, Einzelspule

- Flanschbohrungen nach DIN EN 1092-1 PN 16
- Verwendung: Verschiedene Arten von Flüssigkeiten, wie z.B. Heiz-, Diesel-, Schweröl und Wasser
- Betätigungsarten:
  Manuell am Ventil, fernbedient elektrisch

Quick-closing Valve PN 16

nodular cast iron, straight pattern
spring-loaded
electric release, single solenoid

- *flange drilling acc. to DIN EN 1092-1 PN 16*
- *application: for different kind of liquids, mainly fuel oil, diesel oil, heating oil and water*
- *operation mode:*
  locally manual operation, remotely controlled electrically

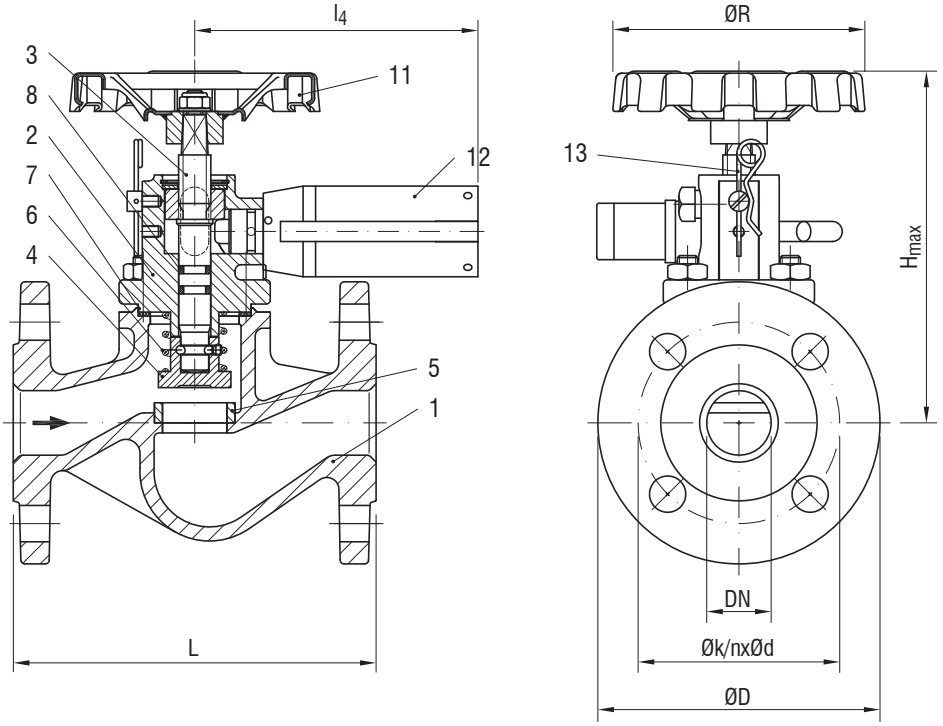

Pos. *item*	Bezeichnung *denomination*	AW **33474**		Pos. *item*	Bezeichnung *denomination*	AW **33474**	
1	Gehäuse / *body*	EN-GJS-400-18U-LT	EN-JS1049	7	Dichtung / *gasket*	Novapress Universal	
2	Oberteil / *bonnet*	EN-GJS-400-18U-LT	EN-JS1049	8	O-Ring / *O-ring*	FPM (Viton)	
3	Spindel / *stem*	X20Cr13	1.4021	11	Handrad / *hand wheel*	FePO3	1.0347
4	Kegel / *disc*	X20Cr13	1.4021	12	elektr. Auslöser *electric actuator*	CuZn40Pb2	CW617N
5	Sitzring / *seat bush*	X20Cr13	1.4021				
6	Feder / *spring*	SH	1.1200	13	Arretierstift / *fixing pin*		

Elektrische Betriebsdaten / *Electric Operating Data*

Betriebsart / *operation mode*	Ruhestromprinzip, 100% ED / *closed current principle, 100% duty ratio*
Leistungsaufnahme / *power consumption*	7,5 W
Versorgungsspannung / *voltage supply*	24 V DC
Schutzart / *protection class*	IP 44 / DIN EN 60529

DN	L	H_{max}	l_4	ØD	ØR	Øk	n	Ød	≈kg
15	130	165	141	95	125	65	4	14	4,5
20	150	165	141	105	125	75	4	14	5,2
25	160	175	141	115	125	85	4	14	6,2
32	180	175	141	140	125	100	4	18	7,2
40	200	190	141	150	125	110	4	18	9,2
50	230	190	141	165	125	125	4	18	11,7

AW	DN	Betriebsdruck *working pressure* max.	Medien-Temp. fluid *temp.* max.	Umgebungstemp. *ambient temp.* max.
33474	**15-50**	**16 bar**	**140°C***	**55°C**

* Falls >70°C, muss der Auslöser gegen Wärmeabstrahlung vom Ventilkörper isoliert werden!
* If >70°C, the actuator has to be insulated from valve body heat radiation!

ACHTUNG: Es gelten Einschränkungen bei Installation auf der Druckseite einer Pumpe! Bitte Rücksprache mit ARMATUREN-WOLFF.
ATTENTION: On the pressure side of a pump restrictions apply! Please contact ARMATUREN-WOLFF for technical advice.

ARMATUREN-WOLFF · Friedrich H. Wolff GmbH & Co. KG
Oehleckerring 29 · 22419 Hamburg - Germany
Tel. +49 40 532873-0 · Fax +49 40 532873-29
E-Mail: aw@armaturen-wolff.de · Internet: www.armaturen-wolff.de

ARMATUREN WOLFF

Schnellschlussventil PN 16

Sphäroguss, Durchgangsform
federbelastet
Elektrische Auslösung, Einzelspule

- Flanschbohrungen nach DIN EN 1092-1 PN 25
- Verwendung: Verschiedene Arten von Flüssigkeiten, wie z.B. Heiz-, Diesel-, Schweröl und Wasser
- Betätigungsarten:
  Manuell am Ventil, fernbedient elektrisch

Quick-closing Valve PN 16

nodular cast iron, straight pattern
spring-loaded
electric release, single solenoid

- *flange drilling acc. to DIN EN 1092-1 PN 25*
- *application: for different kind of liquids, mainly fuel oil, diesel oil, heating oil and water*
- *operation mode:*
  locally manual operation, remotely controlled electrically

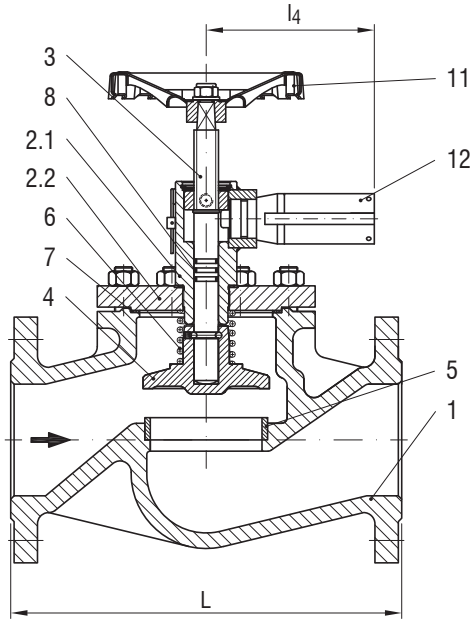

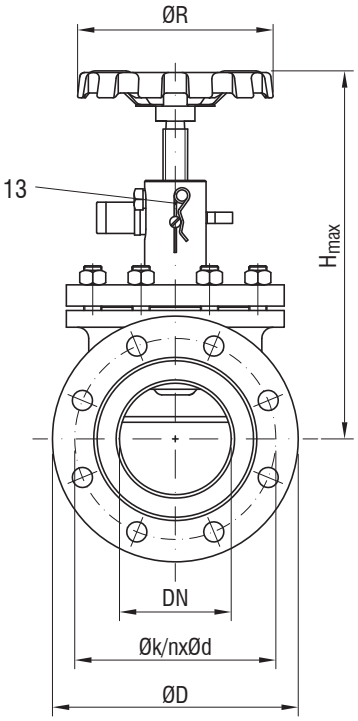

Pos. *item*	Bezeichnung *denomination*	AW **33474**		Pos. *item*	Bezeichnung *denomination*	AW **33474**	
1	Gehäuse / *body*	EN-GJS-400-18U-LT	EN-JS1049	6	Feder / *spring*	SH	1.1200
2.1	Hülse / *sleeve*	S355GT	1.0580	7	Dichtung / *gasket*	Novapress Universal	
2.2	Deckel / cover	EN-GJS-400-18U-LT	EN-JS1049	8	O-Ring / *O-ring*	FPM (Viton)	
3	Spindel / *stem*	X20Cr13	1.4021	11	Handrad / *hand wheel*	FePO3	1.0347
4	Kegel / *disc*	X20Cr13	1.4021	12	el. Auslöser / *el. actuator*		
5	Sitzring / *seat bush*	X20Cr13	1.4021	13	Arretierstift / *fixing pin*		

Elektrische Betriebsdaten / *Electric Operating Data*

Betriebsart / *operation mode* ..... Ruhestromprinzip, 100% ED / *closed current principle, 100% duty ratio*
Leistungsaufnahme / *power consumption* ..... 7,5 W
Versorgungsspannung / *voltage supply* ..... 24 V DC
Schutzart / *protection class* ..... IP 44 / DIN EN 60529

DN	L	H_{max}	l_4	ØD	ØR	Øk	n	Ød	≈kg
65	290	305	151	185	175	145	4	18	18,2
80	310	305	151	200	175	160	8	18	22,2
100	350	330	151	220	175	180	8	18	34,2
125	400	385	156	250	225	210	8	18	52,2
150	480	420	156	285	250	240	8	18	65,2

AW	DN	Betriebsdruck *working pressure* max.	Medien-Temp. fluid *temp.* max.	Umgebungstemp. *ambient temp.* max.
33474	**65-150**	**16 bar**	**140°C***	**55°C**

* Falls >70°C, muss der Auslöser gegen Wärmeabstrahlung vom Ventilkörper isoliert werden!
* If >70°C, the actuator has to be insulated from valve body heat radiation!

ACHTUNG: Es gelten Einschränkungen bei Installation auf der Druckseite einer Pumpe! Bitte Rücksprache mit ARMATUREN-WOLFF.
ATTENTION: On the pressure side of a pump restrictions apply! Please contact ARMATUREN-WOLFF for technical advice.

ARMATUREN-WOLFF · Friedrich H. Wolff GmbH & Co. KG
Oehleckerring 29 · 22419 Hamburg - Germany
Tel. +49 40 532873-0 · Fax +49 40 532873-29
E-Mail: aw@armaturen-wolff.de · Internet: www.armaturen-wolff.de

ARMATUREN WOLFF

Schnellschlussventil PN 16

Sphäroguss, Durchgangsform
federbelastet
Elektrische Auslösung, Doppelspule

- Flanschbohrungen nach DIN EN 1092-1 PN 16
- Verwendung: Verschiedene Arten von Flüssigkeiten, wie z.B. Heiz-, Diesel-, Schweröl und Wasser
- Betätigungsarten:
  Manuell am Ventil, fernbedient elektrisch

Quick-closing Valve PN 16

nodular cast iron, straight pattern
spring-loaded
electric release, double solenoid

- *flange drilling acc. to DIN EN 1092-1 PN 16*
- *application: for different kind of liquids, mainly fuel oil, diesel oil, heating oil and water*
- *operation mode:*
  locally manual operation, remotely controlled electrically

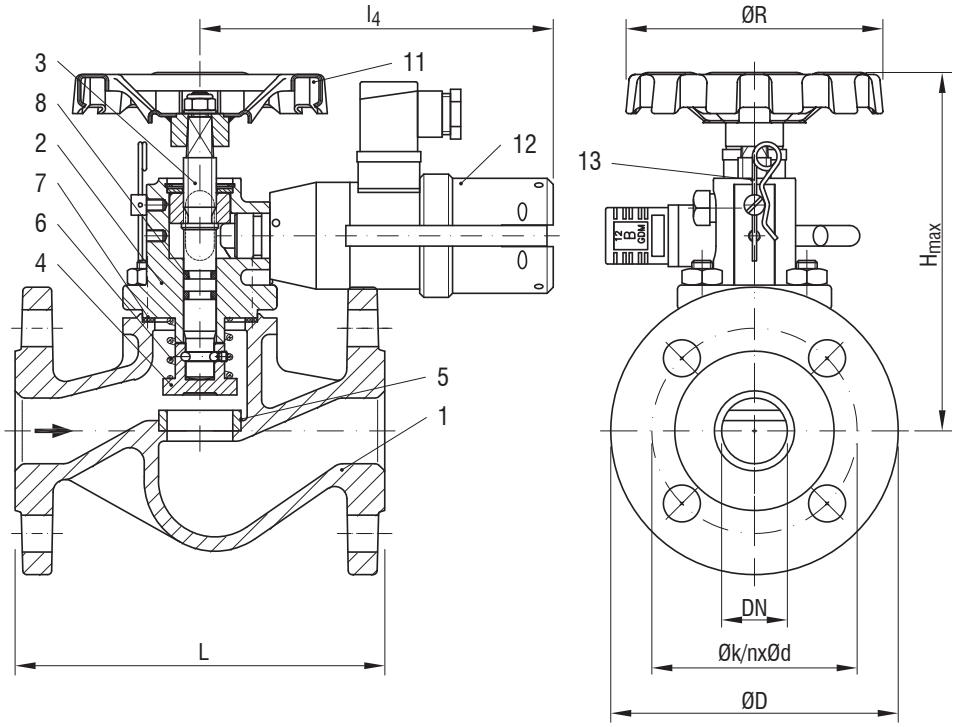

Pos. *item*	Bezeichnung *denomination*	AW **33484**		Pos. *item*	Bezeichnung *denomination*	AW **33484**	
1	Gehäuse / *body*	EN-GJS-400-18U-LT	EN-JS1049	7	Dichtung / *gasket*	Novapress Universal	
2	Oberteil / bonnet	EN-GJS-400-18U-LT	EN-JS1049	8	O-Ring / *O-ring*	FPM (Viton)	
3	Spindel / *stem*	X20Cr13	1.4021	11	Handrad / *hand wheel*	FePO3	1.0347
4	Kegel / *disc*	X20Cr13	1.4021	12	elektr. Auslöser *electric actuator*		
5	Sitzring / *seat bush*	X20Cr13	1.4021				
6	Feder / *spring*	SH	1.1200	13	Arretierstift / *fixing pin*		

Elektrische Betriebsdaten / *Electric Operating Data*

Betriebsart / *operation mode* ..... Ruhestromprinzip, 100% ED / *closed current principle, 100% duty ratio*
Leistungsaufnahme / *power consumption* ..... 12 W (2x 6 W)
Versorgungsspannung / *voltage supply* ..... 24 V DC (2x)
Schutzart / *protection class* ..... IP 55 / DIN EN 60529

DN	L	H_{max}	l_4	ØD	ØR	Øk	n	Ød	≈kg
15	130	165	172	95	125	65	4	14	4,3
20	150	165	172	105	125	75	4	14	5,0
25	160	175	172	115	125	85	4	14	6,0
32	180	175	172	140	125	100	4	18	7,0
40	200	190	172	150	125	110	4	18	9,0
50	230	190	172	165	125	125	4	18	11,5

AW	DN	Betriebsdruck *working pressure* max.	Medien-Temp. fluid *temp.* max.	Umgebungstemp. *ambient temp.* max.
33484	**15-50**	**16 bar**	**140°C***	**55°C**

* Falls >70°C, muss der Auslöser gegen Wärmeabstrahlung vom Ventilkörper isoliert werden!
* If >70°C, the actuator has to be insulated from valve body heat radiation!

ACHTUNG: Es gelten Einschränkungen bei Installation auf der Druckseite einer Pumpe! Bitte Rücksprache mit ARMATUREN-WOLFF.
ATTENTION: On the pressure side of a pump restrictions apply! Please contact ARMATUREN-WOLFF for technical advice.

ARMATUREN-WOLFF · Friedrich H. Wolff GmbH & Co. KG
Oehleckerring 29 · 22419 Hamburg - Germany
Tel. +49 40 532873-0 · Fax +49 40 532873-29
E-Mail: aw@armaturen-wolff.de · Internet: www.armaturen-wolff.de

ARMATUREN WOLFF

Schnellschlussventil PN 16

Sphäroguss, Durchgangsform
federbelastet
Elektrische Auslösung, Doppelspule

- Flanschbohrungen nach DIN EN 1092-1 PN 16
- Verwendung: Verschiedene Arten von Flüssigkeiten, wie z.B. Heiz-, Diesel-, Schweröl und Wasser
- Betätigungsarten:
  Manuell am Ventil, fernbedient elektrisch

Quick-closing Valve PN 16

nodular cast iron, straight pattern
spring-loaded
electric release, double solenoid

- *flange drilling acc. to DIN EN 1092-1 PN 16*
- *application: for different kind of liquids, mainly fuel oil, diesel oil, heating oil and water*
- *operation mode:*
  locally manual operation, remotely controlled electrically

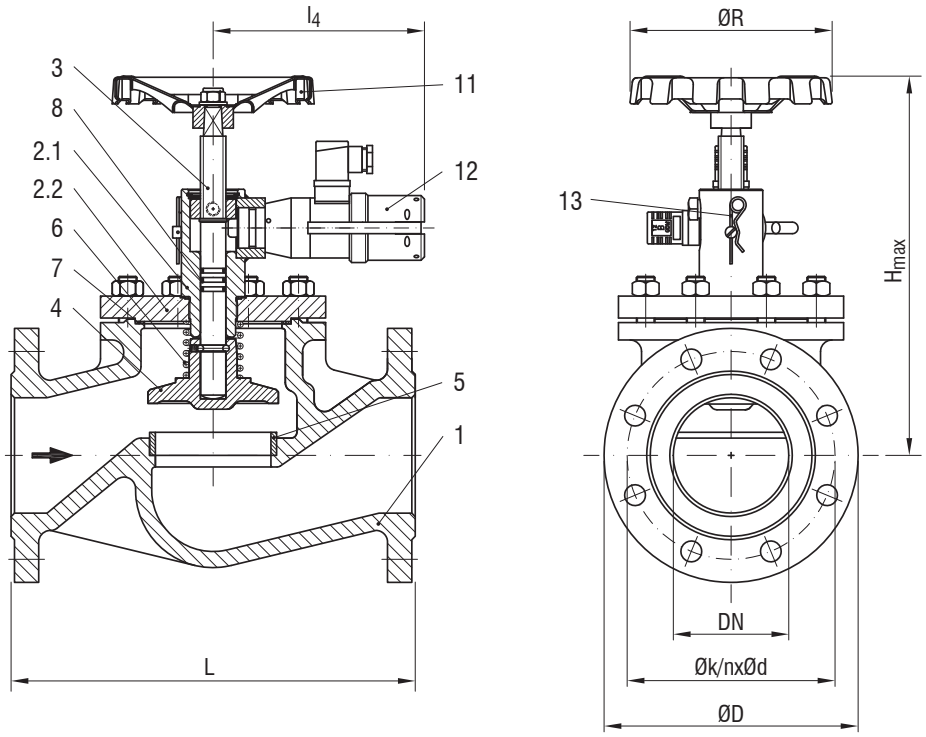

Pos. *item*	Bezeichnung *denomination*	AW **33484**		Pos. *item*	Bezeichnung *denomination*	AW **33484**	
1	Gehäuse / *body*	EN-GJS-400-18U-LT	EN-JS1049	6	Feder / *spring*	SH	1.1200
2.1	Hülse / *sleeve*	S355GT	1.0580	7	Dichtung / *gasket*	Novapress Universal	
2.2	Deckel / cover	EN-GJS-400-18U-LT	EN-JS1049	8	O-Ring / *O-ring*	FPM (Viton)	
3	Spindel / *stem*	X20Cr13	1.4021	11	Handrad / *hand wheel*	FePO3	1.0347
4	Kegel / *disc*	X20Cr13	1.4021	12	el. Auslöser / *el. actuator*		
5	Sitzring / *seat bush*	X20Cr13	1.4021	13	Arretierstift / *fixing pin*		

Elektrische Betriebsdaten / *Electric Operating Data*

Betriebsart / *operation mode* ..... Ruhestromprinzip, 100% ED / *closed current principle, 100% duty ratio*
Leistungsaufnahme / *power consumption* ..... 12 W (2x 6 W)
Versorgungsspannung / *voltage supply* ..... 24 V DC (2x)
Schutzart / *protection class* ..... IP 55 / DIN EN 60529

DN	L	H_{max}	l_4	ØD	ØR	Øk	n	Ød	≈kg
65	290	305	183	185	175	145	4	18	18,0
80	310	305	183	200	175	160	8	18	22,0
100	350	330	183	220	175	180	8	18	34,0
125	400	385	192	250	225	210	8	18	52,0
150	480	420	192	285	250	240	8	18	65,0

AW	DN	Betriebsdruck *working pressure* max.	Medien-Temp. fluid *temp.* max.	Umgebungstemp. *ambient temp.* max.
33484	**65-150**	**16 bar**	**140°C***	**55°C**

* Falls >70°C, muss der Auslöser gegen Wärmeabstrahlung vom Ventilkörper isoliert werden!
* If >70°C, the actuator has to be insulated from valve body heat radiation!

ACHTUNG: Es gelten Einschränkungen bei Installation auf der Druckseite einer Pumpe! Bitte Rücksprache mit ARMATUREN-WOLFF.
ATTENTION: On the pressure side of a pump restrictions apply! Please contact ARMATUREN-WOLFF for technical advice.

ARMATUREN-WOLFF · Friedrich H. Wolff GmbH & Co. KG
Oehleckerring 29 · 22419 Hamburg - Germany
Tel. +49 40 532873-0 · Fax +49 40 532873-29
E-Mail: aw@armaturen-wolff.de · Internet: www.armaturen-wolff.de

ARMATUREN WOLFF

Schnellschlussventil PN 16

Sphäroguss, Eckform
federbelastet
Elektrische Auslösung, Einzelspule

- Flanschbohrungen nach DIN EN 1092-1 PN 16
- Verwendung: Verschiedene Arten von Flüssigkeiten, wie z.B. Heiz-, Diesel-, Schweröl und Wasser
- Betätigungsarten:
  Manuell am Ventil, fernbedient elektrisch

Quick-closing Valve PN 16

nodular cast iron, angle pattern
spring-loaded
electric release, single solenoid

- *flange drilling acc. to DIN EN 1092-1 PN 16*
- *application: for different kind of liquids, mainly fuel oil, diesel oil, heating oil and water*
- *operation mode:*
  locally manual operation, remotely controlled electrically

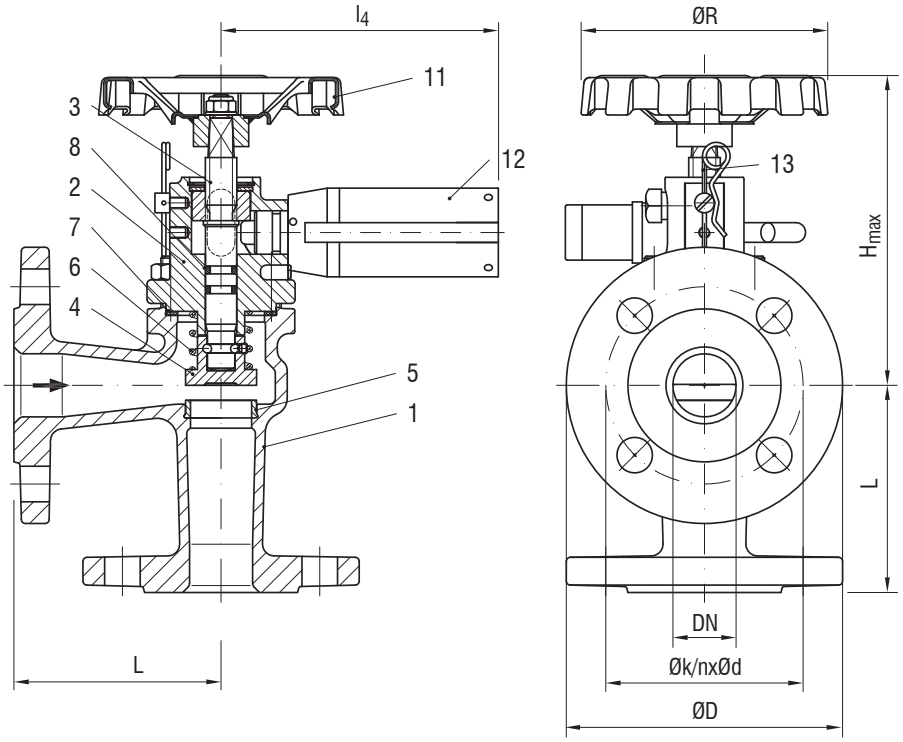

Pos. *item*	Bezeichnung *denomination*	AW **33574**		Pos. *item*	Bezeichnung *denomination*	AW **33574**	
1	Gehäuse / *body*	EN-GJS-400-18U-LT	EN-JS1049	7	Dichtung / *gasket*	Novapress Universal	
2	Oberteil / *bonnet*	EN-GJS-400-18U-LT	EN-JS1049	8	O-Ring / *O-ring*	FPM (Viton)	
3	Spindel / *stem*	X20Cr13	1.4021	11	Handrad / *hand wheel*	FePO3	1.0347
4	Kegel / *disc*	X20Cr13	1.4021	12	elektr. Auslöser *electric actuator*		
5	Sitzring / *seat bush*	X20Cr13	1.4021				
6	Feder / *spring*	SH	1.1200	13	Arretierstift / *fixing pin*		

Elektrische Betriebsdaten / *Electric Operating Data*

Betriebsart / *operation mode* ..... Ruhestromprinzip, 100% ED / *closed current principle, 100% duty ratio*
Leistungsaufnahme / *power consumption* ..... 7,5 W
Versorgungsspannung / *voltage supply* ..... 24 V DC
Schutzart / *protection class* ..... IP 44 / DIN EN 60529

DN	L	H_{max}	l_4	ØD	ØR	Øk	n	Ød	≈kg
15	90	155	141	95	125	65	4	14	4,3
20	95	155	141	105	125	75	4	14	5,0
25	100	160	141	115	125	85	4	14	6,0
32	105	160	141	140	125	100	4	18	7,0
40	115	170	141	150	125	110	4	18	10,0
50	125	165	141	165	125	125	4	18	12,0

AW	DN	Betriebsdruck *working pressure* max.	Medien-Temp. fluid *temp.* max.	Umgebungstemp. *ambient temp.* max.
33574	**15-50**	**16 bar**	**140°C***	**55°C**

* Falls >70°C, muss der Auslöser gegen Wärmeabstrahlung vom Ventilkörper isoliert werden!
* If >70°C, the actuator has to be insulated from valve body heat radiation!

ACHTUNG: Es gelten Einschränkungen bei Installation auf der Druckseite einer Pumpe! Bitte Rücksprache mit ARMATUREN-WOLFF.
ATTENTION: On the pressure side of a pump restrictions apply! Please contact ARMATUREN-WOLFF for technical advice.

ARMATUREN-WOLFF · Friedrich H. Wolff GmbH & Co. KG
Oehleckerring 29 · 22419 Hamburg - Germany
Tel. +49 40 532873-0 · Fax +49 40 532873-29
E-Mail: aw@armaturen-wolff.de · Internet: www.armaturen-wolff.de

ARMATUREN WOLFF

Schnellschlussventil PN 16

Sphäroguss, Eckform
federbelastet
Elektrische Auslösung, Einzelspule

- Flanschbohrungen nach DIN EN 1092-1 PN 25
- Verwendung: Verschiedene Arten von Flüssigkeiten, wie z.B. Heiz-, Diesel-, Schweröl und Wasser
- Betätigungsarten:
  Manuell am Ventil, fernbedient elektrisch

Quick-closing Valve PN 16

nodular cast iron, angle pattern
spring-loaded
electric release, single solenoid

- *flange drilling acc. to DIN EN 1092-1 PN 25*
- *application: for different kind of liquids, mainly fuel oil, diesel oil, heating oil and water*
- *operation mode:*
  locally manual operation, remotely controlled electrically

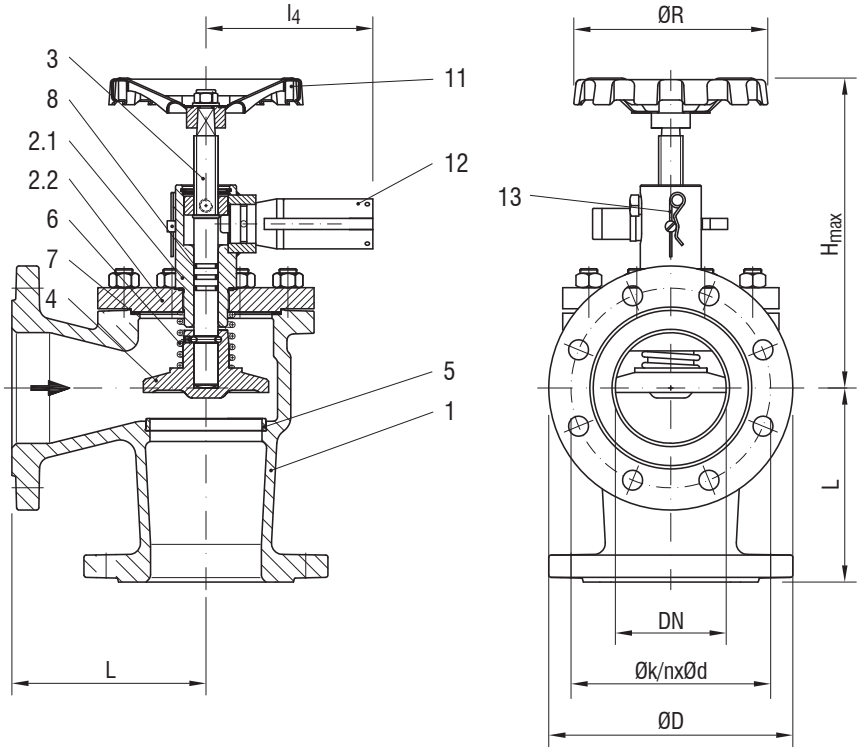

Pos. *item*	Bezeichnung *denomination*	AW **33574**		Pos. *item*	Bezeichnung *denomination*	AW **33574**	
1	Gehäuse / *body*	EN-GJS-400-18U-LT	EN-JS1049	6	Feder / *spring*	SH	1.1200
2.1	Hülse / *sleeve*	S355GT	1.0580	7	Dichtung / *gasket*	Novapress Universal	
2.2	Deckel / cover	EN-GJS-400-18U-LT	EN-JS1049	8	O-Ring / *O-ring*	FPM (Viton)	
3	Spindel / *stem*	X20Cr13	1.4021	11	Handrad / *hand wheel*	FePO3	1.0347
4	Kegel / *disc*	X20Cr13	1.4021	12	el. Auslöser / *el. actuator*		
5	Sitzring / *seat bush*	X20Cr13	1.4021	13	Arretierstift / *fixing pin*		

Elektrische Betriebsdaten / *Electric Operating Data*

Betriebsart / *operation mode* ..... Ruhestromprinzip, 100% ED / *closed current principle, 100% duty ratio*
Leistungsaufnahme / *power consumption* ..... 7,5 W
Versorgungsspannung / *voltage supply* ..... 24 V DC
Schutzart / *protection class* ..... IP 44 / DIN EN 60529

DN	L	H_{max}	156l_4	ØD	ØR	Øk	n	Ød	≈kg
65	145	265	151	185	175	145	4	18	18,0
80	155	270	151	200	175	160	8	18	22,0
100	175	285	151	220	175	180	8	18	31,5
125	200	330	156	250	225	210	8	18	46,0
150	225	360	156	285	250	240	8	22	60,0

AW	DN	Betriebsdruck *working pressure* max.	Medien-Temp. fluid *temp.* max.	Umgebungstemp. *ambient temp.* max.
33574	**65-150**	**16 bar**	**140°C***	**55°C**

* Falls >70°C, muss der Auslöser gegen Wärmeabstrahlung vom Ventilkörper isoliert werden!
* If >70°C, the actuator has to be insulated from valve body heat radiation!

ACHTUNG: Es gelten Einschränkungen bei Installation auf der Druckseite einer Pumpe! Bitte Rücksprache mit ARMATUREN-WOLFF.
ATTENTION: On the pressure side of a pump restrictions apply! Please contact ARMATUREN-WOLFF for technical advice.

ARMATUREN-WOLFF · Friedrich H. Wolff GmbH & Co. KG
Oehleckerring 29 · 22419 Hamburg - Germany
Tel. +49 40 532873-0 · Fax +49 40 532873-29
E-Mail: aw@armaturen-wolff.de · Internet: www.armaturen-wolff.de

ARMATUREN WOLFF

Schnellschlussventil PN 16

Sphäroguss, Eckform
federbelastet
Elektrische Auslösung, Doppelspule

- Flanschbohrungen nach DIN EN 1092-1 PN 16
- Verwendung: Verschiedene Arten von Flüssigkeiten, wie z.B. Heiz-, Diesel-, Schweröl und Wasser
- Betätigungsarten:
  Manuell am Ventil, fernbedient elektrisch

Quick-closing Valve PN 16

nodular cast iron, angle pattern
spring-loaded
electric release, double solenoid

- *flange drilling acc. to DIN EN 1092-1 PN 16*
- *application: for different kind of liquids, mainly fuel oil, diesel oil, heating oil and water*
- *operation mode:*
  locally manual operation, remotely controlled electrically

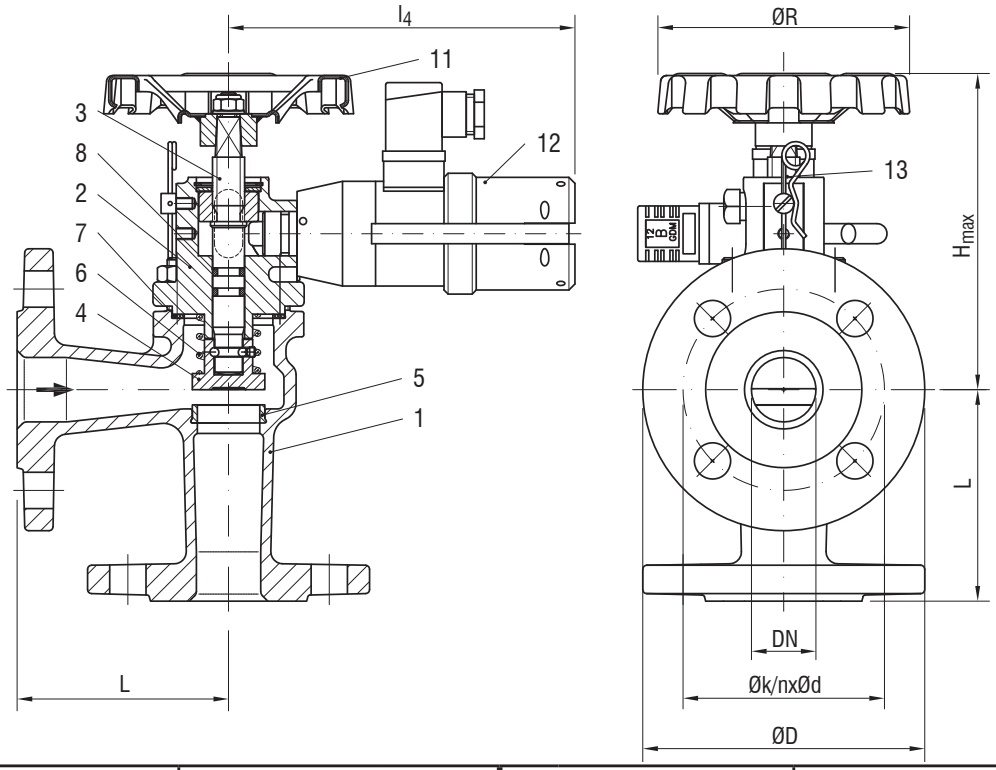

Pos. *item*	Bezeichnung *denomination*	AW **33584**		Pos. *item*	Bezeichnung *denomination*	AW **33584**	
1	Gehäuse / *body*	EN-GJS-400-18U-LT	EN-JS1049	7	Dichtung / *gasket*	Novapress Universal	
2	Oberteil / bonnet	EN-GJS-400-18U-LT	EN-JS1049	8	O-Ring / *O-ring*	FPM (Viton)	
3	Spindel / *stem*	X20Cr13	1.4021	11	Handrad / *hand wheel*	FePO3	1.0347
4	Kegel / *disc*	X20Cr13	1.4021	12	elektr. Auslöser *electric actuator*		
5	Sitzring / *seat bush*	X20Cr13	1.4021				
6	Feder / *spring*	SH	1.1200	13	Arretierstift / *fixing pin*		

Elektrische Betriebsdaten / *Electric Operating Data*

Betriebsart / *operation mode* ..... Ruhestromprinzip, 100% ED / *closed current principle, 100% duty ratio*
Leistungsaufnahme / *power consumption* ..... 12 W (2x 6 W)
Versorgungsspannung / *voltage supply* ..... 24 V DC (2x)
Schutzart / *protection class* ..... IP 55 / DIN EN 60529

DN	L	H_{max}	l_4	ØD	ØR	Øk	n	Ød	≈kg
15	90	155	172	95	125	65	4	14	4,3
20	95	155	172	105	125	75	4	14	5,0
25	100	160	172	115	125	85	4	14	6,0
32	105	160	172	140	125	100	4	18	7,0
40	115	170	172	150	125	110	4	18	10,0
50	125	165	172	165	125	125	4	18	12,0

AW	DN	Betriebsdruck *working pressure* max.	Medien-Temp. fluid *temp.* max.	Umgebungstemp. *ambient temp.* max.
33584	**15-50**	**16 bar**	**140°C***	**55°C**

* Falls >70°C, muss der Auslöser gegen Wärmeabstrahlung vom Ventilkörper isoliert werden!
* If >70°C, the actuator has to be insulated from valve body heat radiation!

ACHTUNG: Es gelten Einschränkungen bei Installation auf der Druckseite einer Pumpe! Bitte Rücksprache mit ARMATUREN-WOLFF.
ATTENTION: On the pressure side of a pump restrictions apply! Please contact ARMATUREN-WOLFF for technical advice.

ARMATUREN-WOLFF · Friedrich H. Wolff GmbH & Co. KG
Oehleckerring 29 · 22419 Hamburg - Germany
Tel. +49 40 532873-0 · Fax +49 40 532873-29
E-Mail: aw@armaturen-wolff.de · Internet: www.armaturen-wolff.de

ARMATUREN WOLFF

Schnellschlussventil PN 16

Sphäroguss, Eckform
federbelastet
Elektrische Auslösung, Doppelspule

- Flanschbohrungen nach DIN EN 1092-1 PN 16
- Verwendung: Verschiedene Arten von Flüssigkeiten, wie z.B. Heiz-, Diesel-, Schweröl und Wasser
- Betätigungsarten:
  Manuell am Ventil, fernbedient elektrisch

Quick-closing Valve PN 16

nodular cast iron, angle pattern
spring-loaded
electric release, double solenoid

- *flange drilling acc. to DIN EN 1092-1 PN 16*
- *application: for different kind of liquids, mainly fuel oil, diesel oil, heating oil and water*
- *operation mode:*
  locally manual operation, remotely controlled electrically

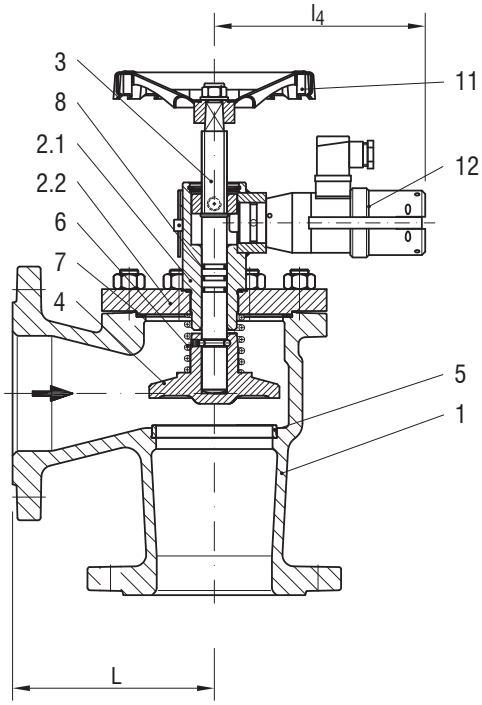

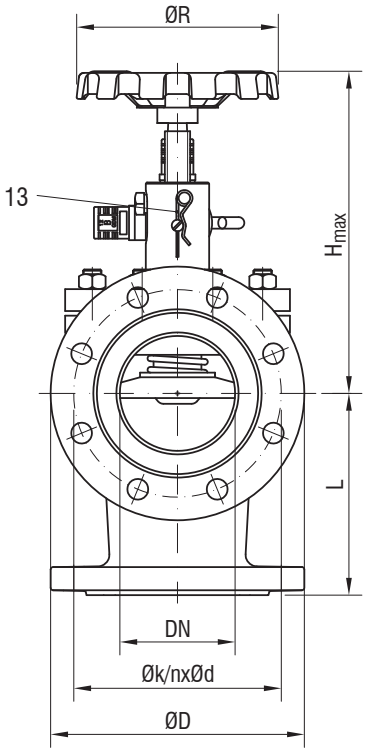

Pos. *item*	Bezeichnung *denomination*	AW **33584**		Pos. *item*	Bezeichnung *denomination*	AW **33584**	
1	Gehäuse / *body*	EN-GJS-400-18U-LT	EN-JS1049	6	Feder / *spring*	SH	1.1200
2.1	Hülse / *sleeve*	S355GT	1.0580	7	Dichtung / *gasket*	Novapress Universal	
2.2	Deckel / cover	EN-GJS-400-18U-LT	EN-JS1049	8	O-Ring / *O-ring*	FPM (Viton)	
3	Spindel / *stem*	X20Cr13	1.4021	11	Handrad / *hand wheel*	FePO3	1.0347
4	Kegel / *disc*	X20Cr13	1.4021	12	el. Auslöser / *el. actuator*		
5	Sitzring / *seat bush*	X20Cr13	1.4021	13	Arretierstift / *fixing pin*		

Elektrische Betriebsdaten / *Electric Operating Data*

Betriebsart / *operation mode* ..... Ruhestromprinzip, 100% ED / *closed current principle, 100% duty ratio*
Leistungsaufnahme / *power consumption* ..... 12 W (2x 6 W)
Versorgungsspannung / *voltage supply* ..... 24 V DC (2x)
Schutzart / *protection class* ..... IP 55 / DIN EN 60529

DN	L	H_{max}	l_4	ØD	ØR	Øk	n	Ød	≈kg
65	145	265	183	185	175	145	4	18	18,0
80	155	270	183	200	175	160	8	18	22,0
100	175	285	183	220	175	180	8	18	31,5
125	200	330	192	250	225	210	8	18	46,0
150	225	360	192	285	250	240	8	18	60,0

AW	DN	Betriebsdruck *working pressure* max.	Medien-Temp. fluid *temp.* max.	Umgebungstemp. *ambient temp.* max.
33584	**65-150**	**16 bar**	**140°C***	**55°C**

* Falls >70°C, muss der Auslöser gegen Wärmeabstrahlung vom Ventilkörper isoliert werden!
* If >70°C, the actuator has to be insulated from valve body heat radiation!

ACHTUNG: Es gelten Einschränkungen bei Installation auf der Druckseite einer Pumpe! Bitte Rücksprache mit ARMATUREN-WOLFF.
ATTENTION: On the pressure side of a pump restrictions apply! Please contact ARMATUREN-WOLFF for technical advice.

Contents

1. General

The following remarks refer to complete systems containing quick-closing valves with electric actuation as well as corresponding control cabinets (short designation AW/FSV-E System). The main perspective of this operating instruction is the application on board of sea-going vessels.

Rules and approvals:
- DNV GL (complete system)
- RINA Registro Italiano Navale (complete system)
- RMRS Russian Maritime Register of Shipping (valves in the context of this system)
- LRS Lloyd's Register of Shipping (valves in the context of this system)
- ABS American Bureau of Shipping (valves in the context of this system)

Please refer to the references to the respectively relevant rules and conditions in the corresponding type approval certificates.

1.1. Marks

Quick-closing valves are marked with the following information in delivery status:
- Manufacturer (plate at handwheel)
- Type no. (label)
- Body material (cast)
- Pressure class (cast)
- Nominal bore (cast)
- Batch no. and foundry sign (cast)
- Direction of flow (cast)

1.2. Tightness of Quick-Closing Valves

For design reasons, quick-closing valves with metal trim have a slight leakage at the seat. A leakage rate „D“ according to EN 12266-1:2003 (P12) is guaranteed by means of a 100% pressure test of the produced valves. For the body, a full pressure tightness and burst strength is guaranteed in accordance with EN 12266-1:2003 (P10/P11) depending on the respective pressure class.

Soft-sealed quick-closing valves have got a lower leakage rate, due to conceptual reasons. ARMATUREN-WOLFF fits soft-sealed quick-closing valves with different elastomer materials, depending on customer requirements and the operating conditions of the plant.

Attention: Soft-sealed quick-closing valves may not be used at storage and service tanks with a capacity of more than 500 liters!

All ARMATUREN-WOLFF products are tested with regards to correct function as well as possible damage and leakages. Before installation, the valves should undergo an additional sight inspection procedure, and before system start-up, the tightness of the plants and systems is to be verified.

1.3. Medium

Before installation and start-up of the plant it is to be verified that valve materials are suitable for the medium. In case of doubt the manufacturer will be glad to approve the adequacy of the chosen materials.

Unsuitable combinations of medium and valve materials may lead to leakages at the valve seat. Dangerous kinds of medium may not get into the environment.

For assembly, we use lubricants on mineral oil basis. Please note that these can get in contact with the medium, if no special measures are undertaken against this effect. Lubricants and auxiliary liquids may theoretically get into the medium and cause pollution or provoke unintended chemical reactions.

1.4. Ambient and Medium Temperature

Quick-closing valves from ARMATUREN-WOLFF are not sensitive against changing ambient temperatures. In case the ambient temperature should drop far below 0°C or rise clearly above 55°C (valves; rated temperature at valve actuator > 70°C) or 45°C (control cabinet), suitable measures should be undertaken to cool the electrical components. If appropriate, electrical components should be isolated against heat impact from outside as well as from the valve body.
The medium temperature can be up to 140°C, if it is higher than 70°C, the actuator has to be isolated from valve body heat radiation!

Attention: Valves which are intended for use with different media at different operating temperatures (in particular, HFO and MGO/MDO, e.g.), special conditions apply and must be taken into respect for a specific layout of the stem sealing arrangement!
Please contact ARMATUREN-WOLFF in such cases for possible technical advice.

Due to the process controlled charge and discharge cycle, electrical control cabinet are sensitive against frequent and high changes of the ambient temperature. If the ambient temperature changes often by more than 10K within short times, so that the components of the control cabinet cannot adapt evenly to the new temperature level, an option for the active modification of the charge current should be taken into consideration. Otherwise, the accumulators risk to gas out. If this option should be required, it has to be mentioned with the order.

1.5. Vibrations

Quick-closing valves and control cabinets are insensitive against weak shocks and vibrations below 0,7g. In case it should not be possible to limit the local vibrations under below this value, quick-closing valves should be isolated from the pipeline. For this purpose, ARMATUREN-WOLFF offers special vibration dampers.

1.6. Pipe Tensions

Pipelines and pipeline systems have to be installed in such way that no tensions from expansion and temperature may have impact on the valve. This can theoretically even lead to breaks in the valve, causing danger from medium spills. ARMATUREN-WOLFF offers suitable expansion joints for this purpose.

1.7. Protection during Storage and Transport

All protection devices for transport and storage have to be removed before installation. If the equipment is not installed directly after delivery, the following measures should be taken care for:

- Storage in a dry place, protected from environmental impact
- Optimum storage temperature is 5°C to 40°C
- Protection against dust and dirt impact
- The valves should be protected against strong heat and cold impact.

The contact plug between the two batteries must not be closed (pushed in) before the actual system start-up!

2. Technical Data

2.1. Valves

Operation mode:	Closed-circuit principle, 100% duty ratio
Power consumption:	7,5 Watts/valve (single solenoid) 12,0 Watts/valve (double solenoid)
Voltage supply:	24 V DC
Ambient temperature:	0 - 55°C
Medium temperature:	up to 140°C, if > 70°C, the actuator has to be isolated from valve body heat radiation!
Protection class:	IP 55 { (single solenoid) / (double solenoid) acc. to DIN EN 60529 (higher protection classes on special request)

2.2. Control Cabinet

Power consumption:	max. ≈ 270 W (depending on specific conditions)
Voltage supply:	115 - 230 V AC, 47 - 63 Hz, additionally parallel 24 V DC (external power supply)
Ambient temperature:	0 - 45°C Optimum range (for battery lifetime): 0 - 25°C
Protection class:	IP 22 acc. to DIN EN 60529 (higher protection classes on special request, however not higher than IP 44)

3. Installation

3.1. Instructions for the Installation of Valves into the Pipeline

Lever, switches, actuator, etc. may never be used in order to lift the valve.
Quick-closing valves should be protected against falling down, after removal of the packing material.

During the installation it has to be made sure that trim and sealing surfaces are not damaged.

Quick-closing valves must always be installed in such way that the medium inlet is above the cone (direction of flow = closing direction). **In horizontal pipelines, the valve may not be installed with a downward-showing bonnet!**

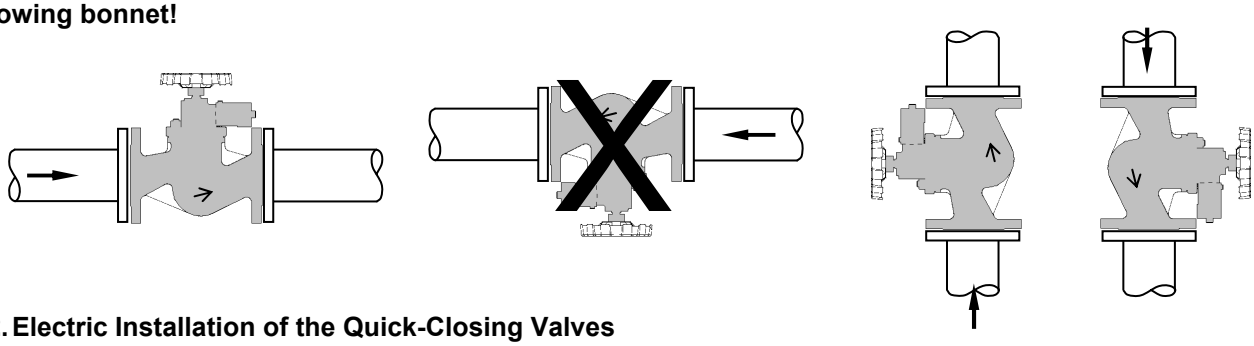

3.2. Electric Installation of the Quick-Closing Valves

The valve solenoids are connected by means of rectangular angle plug connectors. In standard execution, the actuators are fitted with cable glands Pg11 (for cable diameters 6 - 9 mm) – different plugs available on request.

Every solenoid is connected with a three wire cable. Two of these leads are used for the supply of the solenoid, whereas the third is used to connect the supervision conductor. Depending on the specific installation situation, suitable measures have to be defined in order to minimize the risk of damaging the plug or the actuator.

Connection scheme (general):

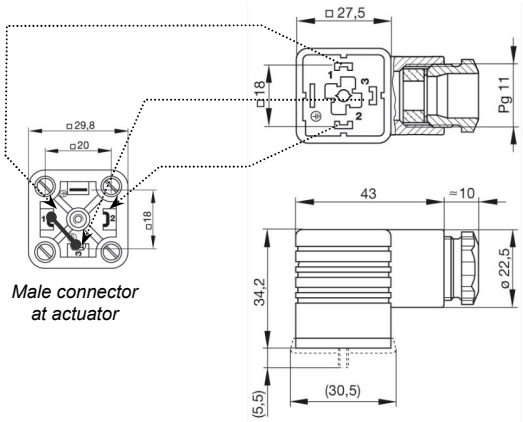

Male connector at actuator

Female plug connector

Contacts of valve connector
1 (+)
2 (–)
3 (feedback conductor)

Terminal pattern *(plug connector <u>without</u> thermal link):*

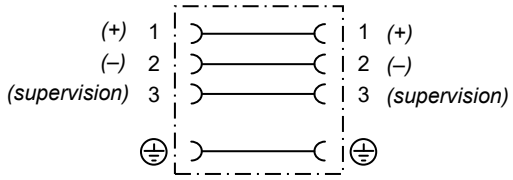

Terminal pattern *(plug connector <u>with</u> thermal link):*

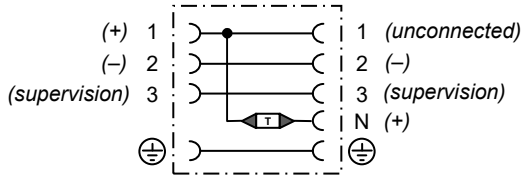

Application in accordance to Lloyd's Register:
In order to comply with the relevant Lloyd's Register rules and regulations the following additional provisions have to be taken into respect:

a) Quick-closing valves generally have to be equipped with a thermal link in order to make sure that under impact of fire the valve will take its safest position, i.e. is guaranteed to close.
b) The connection cables have to be equipped with a cable coupling, which is placed in a safe distance to the valve. In case of an extreme impact of heat, and subsequent closure of the valve, the actuator can be replaced very easily, then, in order to reestablish full functionality and unrestricted ship operation.
c) For this purpose, a sufficient number of replacement actuators with fitted cable and coupling half have to be kept on stock on board.

Suitable cable couplings are available upon request at ARMATUREN-WOLFF, whereas a specific type is not mandatory.

Under these provisions, the connection diagram of an electric quick-closing valve is as follows:

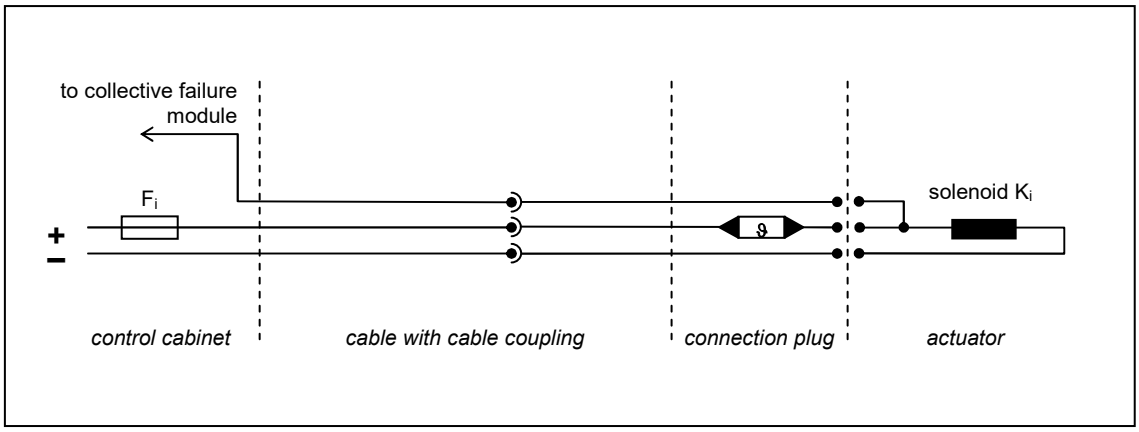

Application in accordance to ABS American Bureau of Shipping:
In order to comply with the relevant ABS rules and regulations the following additional provisions have to be taken into respect:
Quick-closing valves generally have to be equipped with a thermal link in order to make sure that under impact of fire the valve will take its safest position, i.e. is guaranteed to close.

Requirements for control cable:

Cores:	min. 3 x 1,0 mm²
Diameter:	according to applied plug connector, see above
Approval:	type approved ship cable for category 2 (unshielded)
Temperature resistance:	permanently min. 65°C
Conductor material, max. length:	The regulations of the classification society with regards to the maximum allowable voltage drop have to be observed.

In case of doubt, ARMATUREN-WOLFF is readily prepared to verify the suitability of a specific cable. If requested, we are also able to supply suitable control cables along with the main equipment and to fit these with plug connectors as well labels.

Where valves with double solenoids are installed, suitable measures shall be undertaken to minimize the risk of a damage to both control cables at the same time (examples: local separation, additional mechanic protection, separate cable ways). Depending on the specific situation, if suitable, the angle connectors should be fitted with an additional protection, in order to minimize the risk of damage or separation from the actuator. **It must be observed in general that water impact from outside has to be avoided. In particular the kinds of impact which do not correspond to the protection class under section 2.1 (e.g. strong water jet) have to be prevented!**

Before switching on the power supply, correct cable connection shall imperatively be double-checked.

3.3. Installation of the Control Cabinet

Attention: The following circuit diagram merely serves as example, since in a specific case the number of release switches, the number and grouping of valves, the type of battery-buffered direct current supply unit as well as the number of ports for the collective fault alarm module can differ. Consequently, the numbers of the clamps for the external power supply 24V as well as the collective fault alarm may be different.

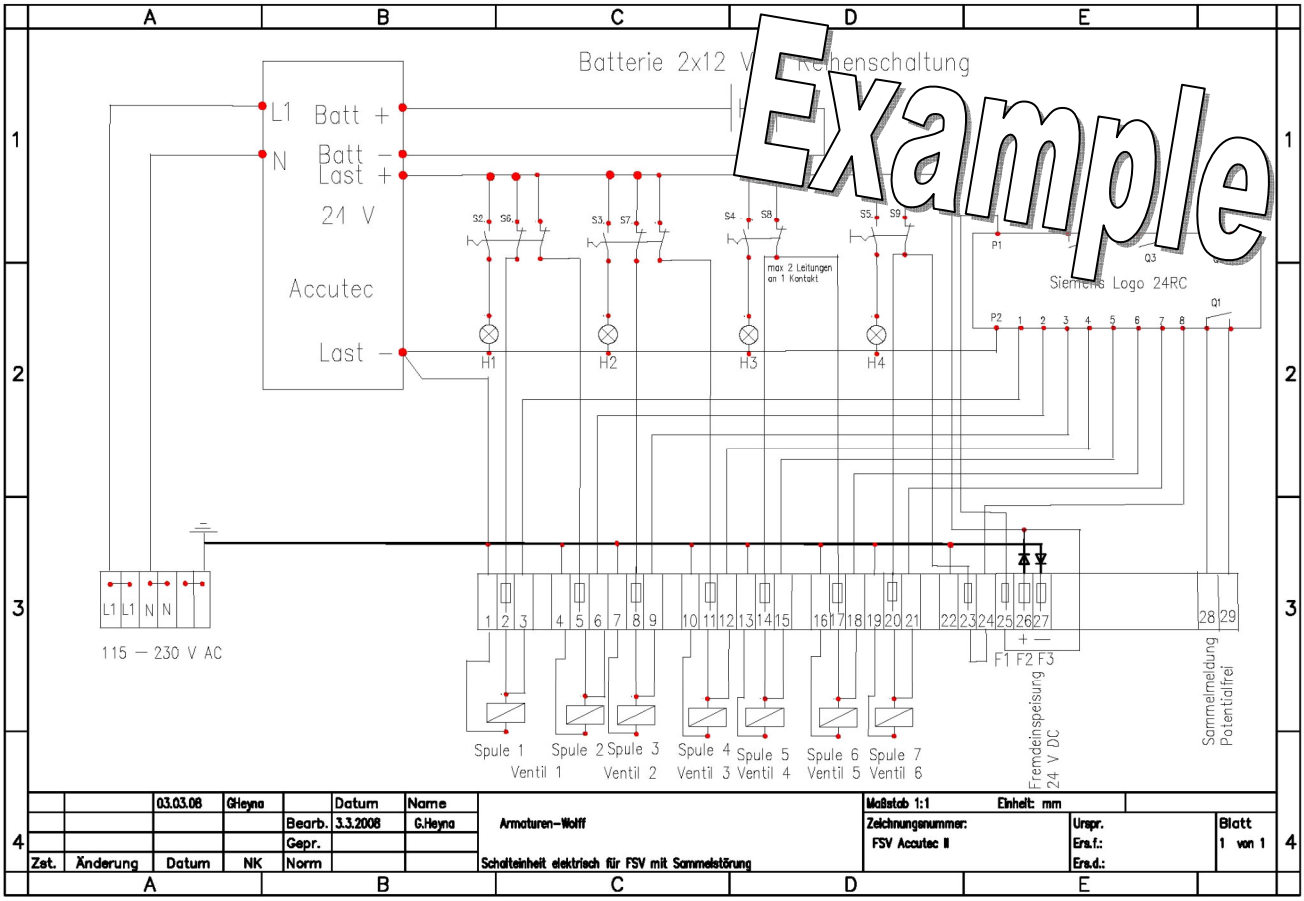

Voltage Supply
In general, both the main power supply of 115 – 230 V AC (clamps no. L1/N/⏚) **and** the direct (parallel) external power supply of 24 V DC (in the depicted example, clamps no. 26/27) have to be connected!
The electrical connections may only be made in voltage-free state, the mains switch must be turned off and the contact bridge between the two batteries has to remain interrupted (as delivered)!

Application in accordance to ABS American Bureau of Shipping:
In order to comply with the relevant ABS rules and regulations the following additional provisions have to be taken into respect:
If electrically actuated quick-closing valves are used on fuel oil tanks within propulsion machinery space, the source of power is to be from emergency switchboard.

Supervision Wires
The supervision of the system is generally realized with potential free contacts, which work either as normally closed (NC) or as normally opened (NO) contacts.

The following contacts imperatively have to be connected and lead to a permanently staffed place:

Supervision	Contacts	Function
Main power supply available	AkkuTEC module (I/O no. 6/7)	NC (closed, opens in case of failure)
Battery OK	AkkuTEC module (I/O no. 8/9)	NC (closed, opens in case of failure)
Power supply of all valve solenoids OK	Collective fault alarm (clamps in the example circuit diagram no. 28/29)	NC (closed, opens in case of failure)

For the purpose of an easier handling, these contacts are connected to the terminal block as well – clamp numbers according to circuit diagram in the specific case.
These supervisions also have to be connected to the alarm system inside the engine room in such way, that a failure is indicated both optically and acoustically as a „general machinery alarm“ in the engine room control room as well as at the light calling columns in the engine room.

In addition to this, the following supervision options are possible:

Supervision	Contacts	Function
Main power supply available	AkkuTEC module (USB-Port)	DCD active
Battery OK	AkkuTEC module (USB-Port)	CTS active
Main power supply interrupted	AkkuTEC module (I/O no. 5/7)	NO (open, closes in case of failure)
Power supply of the valve solenoids	Collective fault alarm module	NC (closed, opens in case of failure) or NO (open, closes in case of failure)
	(This component is a programmable logic module and therefore programmable in a flexible way with regards to its reaction to different single kinds of failure – please refer to the separate operating instruction, available on request)	

Remarks about Grouping of Quick-Closing Valves
The quick-closing valves are generally arranged in groups by ARMATUREN-WOLFF through electrical connections inside the control cabinet. Changing of this arrangement requires the approval from ARMATUREN-WOLFF. It has to be taken into respect that each switch can have a maximum of three contacts, which can each connect to a maximum of two solenoids (therefore max. 6 solenoids per release switch).

In the example circuit diagram above, the switches S6 and S7 control each two separate, electrically independent contacts. At the switches S8 and S9 the connection of two wires to one contact is demonstrated.

To be observed:
Valves installed at fuel oil day tanks for the supply of main engine and generators, if those valves are installed without redundancy, have to be equipped with a double solenoid actuator (in the example scheme, this is the case with valve no. 1, connected with the clamps no. 1/2/3 and 4/5/6). The solenoids of this kind of actuator have each got a sufficient holding force to keep the valve open even in case of a failure at one solenoid.

It is not acceptable to connect groups of more than one valve of this kind to one switch; this is only acceptable for double solenoid valves of the *same plant unit* (for instance, inlet and outlet of the same engine)!
The two solenoids of one actuator may not be connected to the same contact.

In general, each solenoid has to be connected with a separate cable in accordance with the a.m. provisions. In order to connect single solenoid actuators which are placed in short distance to each others and which are grouped under the same release switch, it is possible to use an appropriate multiple core cable from the control cabinet to a central distribution point. This main control cable shall have three separate conductors for each solenoid, i.e. in case of three valves, for instance, nine single conductors. The requirements described under section 3.2 with regards to core diameter, approval, temperature resistance and maximum voltage drop are valid in analogy for the main control cable.

System Start-up and Shut-down
For start-up, the contact plug between the two batteries has to be closed (by pushing in), the power supply has to be switched on and the mains switch inside the control cabinet has to be turned on.
For shut-down of the control cabinet, the contact plug between the two batteries must be interrupted (by pulling out), in order to prevent a deep discharge (and a damage) of the accumulators! Additionally, the mains switch has to be turned off.

4. Operation

4.1. Operation of the Quick-Closing Valves

Opening of the Valve
After release, the valve can be reset according to the following procedure:

1. Make sure the voltage supply of the actuator is switched on.
2. Turn the handwheel to the right (clockwise) until resistance.
3. Pull the lever of the actuator;
   the tappet of the actuator will be moved out and held in that position.
4. Turn the handwheel to the left (counter-clockwise) until a slight resistance is noticed.
5. Turn the handwheel to the right by a quarter turn.
   This will make sure to release potential stress from all moving parts.

Now the valve is operational in its home position with pre-compressed spring.

Operational, opened valve:

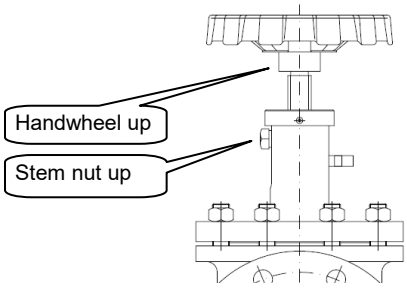

If the valve is required to be fixed in open position without the power supply being switched on, there is a fixing pin available at the actuator. This pin is inserted into the corresponding hole in the actuator while the actuator lever is pulled. **ATTENTION: In this situation the valve cannot be released any more!** As delivered, there is one fixing pin available at every valve, where it should be kept also after installation.

Closing of the Valve
The valve is closed by interruption of the power supply, which loosens the fixing device by the actuator und allows the pre-compressed spring to quickly close the valve.

When the power is switched on, the valve can also be closed manually by means of the handwheel like a regular globe valve.

Valve after release (closed):

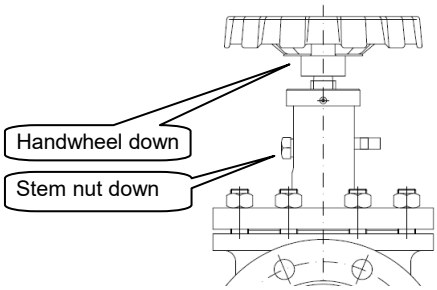

4.2. Operation of the Control Cabinet

Release
In order to release a valve or a group of valves, turn the corresponding release switch. This interrupts the power supply of the respective valves and makes the valves close under spring force.

During the actuation of the release switch, its internal signal lamp will burn red. The interruption of the circuit is recorded by the collective fault alarm module, thereby creating a failure alarm.

Displays
During normal operation (i.e. main power supply available 230V, all valves under voltage) the LEDs at the front of the AkkuTEC module burn with green light:

Ua	O	(supply voltage 24 V DC available at the clamps)
Netz OK	O	(main power supply available)
Batt OK	O	(battery OK)

In case of a respective failure, the corresponding LEDs will go out, in case of a strongly fatigued battery, the LED „Batt OK“ is blinking (regularly tested every 60 seconds).

On the display of the collective failure alarm module it can be seen for which solenoids or control lines voltage supply is available and working.

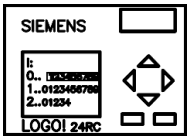

There, a figure with black background signifies working and uninterrupted voltage supply, whereas a figure with light background means that the corresponding circuit is interrupted.

Example:
123456789 all control lines OK, line or solenoid no. 3 interrupted

The display is always in several lines, even if the number of supervised solenoids is eight or less.

On the inside of the control cabinet door, there is a table showing the relation between the collective fault alarm module and the clamps on the terminal block. For example, line 0/number 3 in the display of the collective fault alarm module may correspond to the clamps 7/8/9 on the terminal block.

5. Maintenance

5.1. Maintenance of the Control Cabinet

For technical reasons, the accumulators installed inside the control cabinet suffer from a natural deterioration with growing age, whereas speed depends on the prevailing environmental conditions. Mainly the ambient temperature of the control cabinet has got a major impact on the deterioration, in consequence of which the installed accumulators can be expected to work without defect in accordance with the following function:

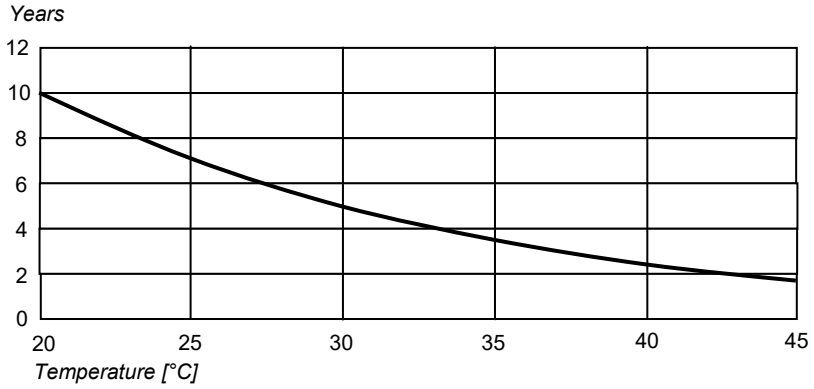

For this reason it is advisable to define a maintenance plan, according to which a battery test is performed after a period of 1,5 years for the first time, and then in regular periods of maximum 6 months. In order to do so, the operation on battery power is enforced by an interruption of the main external power supply (115-230 V) as well as the parallel direct external power supply of 24 V by turning off the mains switch inside the control cabinet, and the measurement of the time during which the valves stay open. If this time should drop below 90 minutes, the accumulators must be replaced.

Appropriate batteries are available at ARMATUREN-WOLFF – please note the exact product descriptions in accordance with section 5.3.

Additionally, a process-controlled, automatic battery test ensures the storage capacity of the batteries during normal operation. If the capacity of the accumulators should not be available in consequence of strong fatigue, this is shown by a red burning LED at the front of the AkkuTEC module. Also, the corresponding supervision contact is switched according to section 3.3. In this case, the batteries must be replaced immediately.

This way, the batteries are made sure to always have a sufficient capacity for a minimum alimentation time of one hour.

In regular periods of maximum 6 months, an extensive function test should be performed, including the release of all connected valve groups.

<u>Exchanging the Batteries</u>
Do make sure the mains switch inside the control cabinet is turned off and the connection between the batteries is interrupted (contact plug pulled out). Accumulators may never be exchanged under voltage!

5.2. Maintenance of the Quick-closing Valves

In normal operation, our quick-closing valves are maintenance free. It has to be made sure, however, that movable parts are kept free from dirt. In regular intervals, which should be defined by the operator and should not exceed six months, the valves should undergo a function test during which also possible dirt is removed.

The actuator solenoids have been laid out for a permanent operation (100% duty ratio) at the above specified operating conditions. Under the influence of external impact, the electrical components can however suffer from an increased fatigue. For this reason, we recommend to apply suitable measures of predictive maintenance and to regularly determine the current fatigue status of the solenoids (for example, measurement of the heat development and/or power consumption under identical conditions, optical inspection), so that the valves are made sure at all times not to close in an uncontrolled way and without a warning.

5.3. Recommended Spare Parts per Quick-Closing Valves Plant

Description	Recommended permanently available quantity on board	Article no.
Accumulator, 12 V, 12 Ah	2	000-101150 (1 ea.)
Valve actuator (single solenoid), DN 15-50, 24 V DC, 7,5 W, Pg11	(t.b.d. acc. to specific case)	000-109438
Valve actuator (single solenoid), DN 65-150, 24 V DC, 7,5 W, Pg11	(t.b.d. acc. to specific case)	000-109437
Valve actuator (double solenoid), DN 15-50, 24 V DC, 12,0 W, Pg11	(t.b.d. acc. to specific case)	000-109704
Valve actuator (double solenoid), DN 65-150, 24 V DC, 12,0 W, Pg11	(t.b.d. acc. to specific case)	000-109705
Electric fuse DIN, 5x20 mm, 0,8 A	10	000-101151 (10 pcs.)
Valve plug, regular type (separate)	-	000-100308
Valve plug with thermal link	-	000-109745
Cable coupling (acc. LRS)	(t.b.d. acc. to specific case)	000-110009

For all components a dry and dust-free storage at a temperature of 0 – 50°C has to be observed (ideal: 5 – 40°C).

6. Safety Remarks

- The operating instruction has to be observed in an obligatory way, the implementation of maintenance actions is to be recorded. In case of noncompliance, all guarantees and liabilities are reserved!
- Sharp edges and flashes can cause injuries. Handle parts with care.
- Quick-closing valves may only be installed, connected and taken into service by appropriately instructed personnel.
- Maintenance personnel must be informed about the dangers related to disassembling and mounting of quick-closing valves as well as electric and machinery installations.
- At all work at a valve installed in a pipeline it has to be made sure that the plant is not under pressure and not medium can escape from the pipeline.
- Never reach into spring-loaded open valves or electrical installations under electrical power, since an unintended touch of conductors or release of the valve can cause serious injuries.
- For the separation of the external power supply, there is a mains power switch installed for the interruption of the main power supply (115 – 230 V AC) as well as the direct external power supply (24 V DC). In order to separate the system from all voltage supply (required for system shut-down), the contact plug between the batteries has to be pulled out.
- **The electric installation as well as a change of the batteries may only be done in a voltage-free situation.** Never loosen electrical contacts during operation! Electrical connections may only be installed in a voltage-free state!
- The contacts of the accumulators my not be switched! Never short-circuit the batteries! Danger of electric arc!
- Verify the correctness of the contacts before first system start-up!
- Never combine new and old batteries or batteries of different types. When not genuine parts are used for replacement, guarantees and liabilities become void.

Elektric Quick-Closing Valve Systems
Enquiry Form/Specification

ARMATUREN-WOLFF • Friedrich H. Wolff GmbH & Co. KG
Oehleckerring 29 • 22419 Hamburg – Germany
Tel. +49 (40) 532 87 30 • Fax +49 (40) 532 87 329
Email: aw@armaturen-wolff.de • Internet : www.armaturen-wolff.de

ARMATUREN WOLFF

1) General

Company (shipyard, customer):		Project / hull no.:	
Address:		addtl. reference:	
Person in charge (commercial):		Delivery time:	
Phone, Fax:			
Email:		addtl. remarks:	
Person in charge (tecnical):			
Phone, Fax:			
Email:			

2) Specification

Flanges (DIN PN x / ANSI x / JIS x)		**Classification society**	
Pressure class PN		**Flag state**	

Remarks:

Please observe the corresponding datasheets and operating manuals!

[1] *Actuators single/double*

An actuator with <u>double</u> solenoid is required at valves, which
a) are installed at ***fuel oil day tanks*** *for the supply of*
b) ***main engine and generators*** *, in case*
c) these valves are ***installed without redundancy*** *.*

[2] *Grouping:*

Actuators with a double solenoid may not be combined under one release switch.

ARMATUREN-WOLFF • Friedrich H. Wolff GmbH & Co. KG
Oehleckerring 29 • 22419 Hamburg – Germany
Tel. +49 (40) 532 87 30 • Fax +49 (40) 532 87 329
Email: aw@armaturen-wolff.de • Internet : www.armaturen-wolff.de

ARMATUREN WOLFF

3) Technical Specification/Design:

Pos.	Valve no. (plan valve number)	System or Designation (e.g. "HFO Day Tank BB")	Materials (e.g. NCI/st.st.)	Pattern (straight/angle)	DN (15-150)	Operating Pressure	Medium Temperature	Class inspection?	3.1 cert.?	Actuator[1] (single/double)	Grouping[2] (release switch no. x)
1											
2											
3											
4											
5											
6											
7											
8											
9											
10											
11											
12											
13											
14											
15											
16											
17											
18											
19											
20											
21											
22											
23											
24											
25											
26											
27											
28											
29											
30											

Certificate No:
TAP00001Z8

TYPE APPROVAL CERTIFICATE

This is to certify:

That the Quick Closing Valve System

with type designation(s)
FSV AkkuTEC II

Issued to
Armaturen-Wolff Friedrich H. Wolff GmbH & Co. KG
Hamburg, Germany

is found to comply with
DNV GL rules for classification – Ships Pt.4 Ch.6 Piping systems

Application :

Product(s) approved by this certificate is/are accepted for installation on all vessels classed by DNV GL.

Issued at **Hamburg** on **2019-12-13**

for **DNV GL**

This Certificate is valid until **2024-12-12**.
DNV GL local station: **Hamburg CMC**

Approval Engineer: **Hagen Markus**

Olaf Drews
Head of Section

This Certificate is subject to terms and conditions overleaf. Any significant change in design or construction may render this Certificate invalid.
The validity date relates to the Type Approval Certificate and not to the approval of equipment/systems installed.

Product description

The quick closing valve system of type FSV AkkuTEC II consist of a control cabinet and quick closing valves provided with spring loaded actuators released by one or two solenoids.
Design of the quick closing valves according to type approval certificate TAP00001Z7.

Technical Data

Control cabinet

Power supply (primary)	115 - 230V AC, 50/60 Hz
UPS device AkkuTEC	Battery buffered - 24V
Power supply (back-up)	24V DC
Monitoring unit	LOGO! 24 RC with potential free alarm contacts
Rotary control switches with indicator light	1…n

Solenoids

Operation mode	closed-circuit principle, 100% ED
Power supply	24V DC
Electrical connection	connector GDM3011, Pg11, IP 65
Cable	3-wire (DNV GL type approved)

Application/Limitation

For the design of the quick closing valve system such as grouping of valves or providing of double solenoids valve actuators as well as the installation of the quick closing system the instruction "Operating Instruction Electric Quick-Closing valve system, AN 7.4-13" is to be observed. Regarding Quick-Closing valves the instruction "Operation Manual FSV, FSÖV, SSVF, AN 7.4-4".

Ambient temperature range: 0°C up to 55°C.
Maximum media temperature: 140°C

For ambient temperatures well above 55°C and media temperatures above 70°C additional cooling for the control cabinet respectively insulation of the valves solenoids is to be provided.

For application of the FSV AkkuTECII the requirements of flag state administration may have to be observed.

Type Approval documentation

Actual certificate TAP00001Z8
Drawings

33474004_S_1_f	Control cabinet for 4 electrical actuators (door closed)
33474004_S_2_f	Control cabinet for 4 electrical actuators (door opened) and parts list
33474004_S_3_f	Parts list (associated with 33474004_S-1f and 33474004_S_2_f)
FSV AkkuTec II	Wiring diagram "Schalteinheit elektrisch für FSV mit Sammelstörung", 2008-04-14

- "Operating Instruction Electric Quick-Closing valve system, AN 7.4-13", Version 6.
- DNVGL Assessment report of production place Hamburg, 2019-09-11

Previous certificate GL 58 630-08HH
Test reports
- paconsult no.: 07-1875, Vibration test on quick closing valves and control cabinet
- paconsult no.: 08-1937, IP 55 test acc. to DIN EN 60529
- paconsult no.: 13- 5044 dry heat test (55°C, 16h)

Drawings

33474004_S_1_e	Control cabinet for 4 actuators (door closed)
33474004_S_2_e	Control cabinet for 4 actuators (door opened) and parts list 33474004_S_3_e (associated with 33474004_S-1e and 33474004_S_2_e)
FSV AkkuTecII	Switch gear unit electrical for FSV with group failure detection Control cabinet for 4 actuators (circuit diagram)
FSV AkkuTecII	Switch gear unit electrical for FSV with group failure detection Control cabinet for 4 actuators (circuit diagram with numbered clamps)

Miscellaneous documents
- AN 7.4-13 Instruction handbook dated 2013-08-20
- F7.4 - 4 Form test protocol electrical actuator
- F7.4 - 5 Form test protocol electrical control cabinet

Tests carried out
Vibration test, IP 55 test acc. to DIN EN 60529, Dry heat test (55°C, 16h)

Marking of product

Example

Periodical assessment
For retention of the Type Approval, a DNV GL Surveyor shall perform periodical assessment after two years (+/- 90 days) and after 3.5 years (+/- 90 days) to verify that the conditions for the Type Approval are complied with. Refer to the Class Programme DNVGL-CP-0338, Sec.4.

End of certificate

Certificate No: 91-20413(E6)-02
Issue Date: 20/02/2020
Expiry Date: 14/11/2021

Type Approval Certificate

This is to certify that the undernoted product(s) has/have been tested with satisfactory results in accordance with the relevant requirements of the Lloyd's Register Type Approval System.

Manufacturer	**Armaturen Wolff**
Address	Friedrich H. Wolff GmbH & Co. KG, Oehleckerring 29, Hamburg, 22419, Germany
Type	Valves - General
Description	Flange spring loaded quick opening or quick closing valves of straight or angle type, standard compact or bellow-sealed design, either rope-, hydraulically- or pneumatically activated Flange spring-loaded quick-opening or quick-closing valves, electrically actuated
Trade Name	AW
Application	As quick closing and opening valves in marine.
Specified Standard	Lloyd's Register Rules and Regulations for the Classification of Ships, 2019
Ratings	see Appendix

Torsten Schroeder

Senior Specialist to Lloyd's Register EMEA
A member of the Lloyd's Register group

71 Fenchurch Street, London, EC3M 4BS, UK

Certificate No: 91-20413(E6)-02
Issue Date: 20/02/2020
Expiry Date: 14/11/2021

Type Approval Certificate

Additional Tests Dust and water jet test for valve electr. release unit PRA 709 acc. DIN EN 60529 - IP55,
fire release function test for thermal link aligned to EN ISO 15541,
vibration test for valves and switch box

This certificate is not valid for equipment, the design, ratings or operating parameters of which have been varied from the specimen tested. The manufacturer should notify Lloyd's Register EMEA of any modification or changes to the equipment in order to obtain a valid Certificate.

The Design Appraisal Document No. ENS 20431-07, Issue No. 3 and its supplementary Type Approval Terms and Conditions form part of this Certificate.

71 Fenchurch Street, London, EC3M 4BS, UK

Certificate No: 91/20413(E6)-02
Issue Date: 20.02.2020
Expiry Date: 19.02.2025

Appendix

TYPES

AW 33005 to 34517 , DN 15 - 250
AW 3320F to 3350F, DN 200 – 250
AW 33075-TS to 33585-TS, DN 15 - 200

RATINGS

Nominal diameter: DN 15 to 250
Quick closing valves type number: AW 33 X Y Z (-TS)
Quick opening valves type number: AW 34 X Y Z (-TS)

For X:	Body material:	Pattern:	Nom. Pressure:
0	Rg. 5 (2.1096)	straight	PN16
1	Rg. 5 (2.1096)	angle	PN16
2	GS-C25 (1.0619)	straight	PN40
3	GS-C25 (1.0619)	angle	PN40
4	GGG 40.3 (0.7043)	straight	PN16
5	GGG 40.3 (0.7043)	angle	PN16

For Y: 0 – manual actuation
1 – (universal) hydraulic / pneumatic release
2 – pneumatic release (only for classic design)
7 – electric actuation single solenoid
8 – electric actuation double solenoid

For Z: 5 – regular design, fire safe (only for quick closing valves)
7 – bellows- sealed design (for quick closing and opening valves)
F – classic design, fire safe (only for quick closing valves)

-TS: with thermal link (only for electric actuator)

Disc material : X20Cr13 or G-CuSn5ZnPb

Certificate No: 91/20413(E6)-02
Issue Date: 20.02.2020
Expiry Date: 19.02.2025

TYPE APPROVAL CERTIFICATE
No. **ELE090016XG**

This is to certify that the product below is found to be in compliance with the applicable requirement of the RINA type approval system.

Description	**Valves remote control system with integral driver**
Type	**FSV AkkuTEC II**
Applicant	**ARMATUREN WOLFF FRIEDRICH H. WOLFF GMBH & CO. KG** **OEHLECKERRING 29** **22419 HAMBURG** **GERMANY**
Manufacturer *Place of manufacture*	**ARMATUREN WOLFF FRIEDRICH H. WOLFF GMBH & CO. KG** **OEHLECKERRING 29** **22419 HAMBURG** **GERMANY**
Reference standards	**- Rules for the Classification of Ships- Part C - Machinery, Systems and fire protection - Ch.3 ; Sect. 6 ; Tab. 1 .**

Issued in **HAMBURG** on **January 3, 2017**. *This Certificate is valid until* **January 2, 2022**

RINA Services S.p.A.
Giuseppe Russo

This certificate consists of this page and 1 enclosure

RINA Services S.p.A.
Via Corsica, 12 - 16128 Genova
Tel +39 010 53851
Fax +39 010 5351000

TYPE APPROVAL CERTIFICATE

No. **ELE090016XG**

Enclosure - Page 1 of 1

FSV AkkuTEC II

Product Description:

The **FSV AkkuTEC II** system is a quick closing valve system which consist of a control cabinet and actuators for spring - loaded quick closing valves.

Control cabinet:
- Power supply (primary): 115 - 230V AC, 50/60Hz
- UPS device AkkuTEC, battery supported - 24V
- Power supply (back-up): 24V DC
- monitoring unit: LOGO! 24RC with potential free alarm contacts
- Rotary control switches with indicator light: 1...n
- Ambient temperature range: 0°C up to 55°C.

Solenoids:
- Operation mode: closed-circuit principle, 100% ED
- Power supply: 24V DC
- Electrical connection: connector GDM3011, Pg11, IP 65
- Maximum media temperature: 140°C

Documents and drawings:

33474000-12 Rev. g dated 18.04.16; 33474000-14 Rev. d dated 18.04.16; 33474004 Rev. f dated 18.04.16;
33484000-12 Rev. h dated 18.04.16; 33484000-14 Rev. d dated 18.04.16;
Circuit diagram FSV AkkuTec II Rev. 1 dated 14.04.08; FSV AkkuTec II (X) Rev. 1 dated 14.04.08;
User manual AN 7.4-13 Rev. 6 dated 2013-08-20

Test reports:

Paconsult GmbH: - 07-1875 dated 06 February 2008; 08-1937 dated 18 March 2008; 13-5044 dated 17 May 2013

Remarks:

- For ambient temperatures well above 55°C and media temperatures above 70°C additional cooling for the control cabinet respectively insulation of the valves solenoids is to be provided. Refer to user manual AN 7.4-13.
- For the design of the quick closing valve system such as grouping of valves or providing of double solenoids valve actuators as well as the installation of the quick closing system the user manual AN 7.4-13-dated 2013-08-20 is to be observed.

SN

HAMBURG January 3, 2017

RINA Services S.p.A.
Via Corsica, 12 - 16128 Genova
Tel +39 010 53851
Fax +39 010 5351000

СВИДЕТЕЛЬСТВО О ТИПОВОМ ОДОБРЕНИИ
TYPE APPROVAL CERTIFICATE

Изготовитель
Manufacturer ***АО"ПО"Технофлот"(ИНН: 7813384275)/JSC"Technoflot"(VAT: 7813384275),***
на производственной базе/production at factory Armaturen - Wolff Friedrich H. Wolff GmbH&Co.KG

Адрес
Address ***195273 Россия, г. Санкт-Петербург, Пискаревский пр., дом 63, Лит.А***
Lit.A,63 Piskarevski avenue, St. Petersburg, 195273 Russia;
Oehleckerring 29, D-22419 Hamburg, Germany.

Изделие*
Product*

Быстрозапорные клапаны с электро/гидроприводом и станции управления БЗК для судовых трубопроводов 1, 2 и 3 классов.
Electric/Hydraulic drive quick-close valves and quick-close control station for 1, 2 and 3 class pipelines.

Код номенклатуры
Code of nomenclature ***08030100, 08030210, 08030220, 08030230***

На основании освидетельствования и проведенных испытаний удостоверяется, что вышеупомянутое(ые) изделие(я) удовлетворяет(ют) требованиям Российского морского регистра судоходства.
This is to certify that on the basis of the survey and tests carried out the above mentioned item(s) complies(ly) with the requirements of Russian Maritime Register of Shipping.

Изделия отвечают требованиям гл.4 части VIII Правил Классификации и Постройки Морских Судов, 2017.
Products comply with requirement of Sec.4 part VIII of the Rules for the Classification and Construction of Sea-Going Ships, 2017.

Настоящее Свидетельство о типовом одобрении действительно до 16.06.2022
This Type Approval Certificate is valid until

Настоящее Свидетельство о типовом одобрении теряет силу в случаях, установленных в Правилах технического наблюдения за постройкой судов и изготовлением материалов и изделий для судов.
This Type Approval Certificate becomes invalid in cases stipulated in Rules for the Technical Supervision during Construction of Ships and Manufacture of Shipboard Materials and Products.

Дата выдачи
Date of issue 16.06.2017 № 17.01040.313

Российский морской регистр судоходства
Russian Maritime Register of Shipping М.Ю. Иванов / M. Ivanov

М.П.
L.S.

(подпись signature) (фамилия, инициалы name)

*Дополнительную информацию смотри на обороте.
Additional information see overleaf.

Технические данные
Technical data

Быстрозапорные клапаны с электро/гидроприводом, материал: чугун, бронза, латунь, нерж.сталь.
Electric/Hydraulic drive quick-close valves material: cast iron, bronze, brass, stainless steel.

Обозначение/Designation: AW-3361, AW-3362, AW-3397, AW-33204, AW-33214, AW-33304, AW-33314, AW-33404, AW-33414, AW-33474, AW-33484, AW-33504, AW-33514, AW-33574, AW-33584.

Рабочее давление/Working pressure PN: 0,5-2,5 МПа/MPa

Номинальный диаметр/Nominal diameter DN: 15-200 мм/mm

Техническая документация и дата ее одобрения Российским морским регистром судоходства
Technical documentation and the date of its approval by Russian Maritime Register of Shipping

Техническая документация 18-TF/02-23052017 одобрена письмом 313-57-155538 от 06.06.2017.
Technical documentation 18-TF/02-23052017 was approved by letter 313-57-155538 dated 06.06.2017.

Образец изделия испытан под техническим наблюдением Российского морского регистра судоходства.
Product's specimen has been tested under the technical supervision of Russian Maritime Register of Shipping.

Акт № 17.01035.313 от 16.06.2017
Report No. of

Область применения и ограничения
Application and limitations

В судовых трубопроводах 1, 2 и 3 классов для перекачки: пресной воды, забортной воды, масел, топлива и нефтепродуктов.
In 1, 2 and 3 class pipelines for swapping fresh water, sea-water, lubricating oils, fuel oils and petroleum derivatives.

Вид документа, выдаваемого на изделие
Type of document issued for product
Изделие должно поставляться со Свидетельством Российского морского регистра судоходтсва по форме 6.5.30 или 6.5.31.
The product shall be delivered with Russian Maritime Register of Shipping Certificate in accordance with form 6.5.30 or 6.5.31.

TÜV NORD

ZERTIFIKAT

Überwachung der Abnahme
nach Richtlinie 97/23/EG

Zertifikat-Nr.: 07 202 1837 Z 0036/6/01rev.01

Name und Anschrift des Herstellers:	**Armaturen-Wolff** **Friedrich H. Wolff GmbH & Co. KG** **Oehleckerring 29** **22419 Hamburg**

Der Hersteller ist nach Prüfung der Voraussetzungen berechtigt, die von ihm im Rahmen des Geltungsbereichs des Moduls hergestellten Druckgeräte mit dem abgebildeten Zeichen zu kennzeichnen:

CE 0045

Geprüft nach Richtlinie 97/23/EG:	**Interne Fertigungskontrolle mit Überwachung der Abnahme (Modul A1)**
Prüfbericht-Nr.:	**1837 P 0036/6/01 und 1321 P 0002/9/01**
Beschreibung des Druckgerätes:	**Armaturen bis DN 600, PN 25 der Kategorie II**
Fertigungsstätte:	**s. Hersteller**

Hamburg, 14. Januar 2009

notified body TÜV NORD 0045 TÜV NORD Systems

TÜV CERT-Zertifizierungsstelle
für Druckgeräte
der TÜV NORD Systems
GmbH & Co. KG

F. Wehowsky, Dipl.-Ing.
Benannte Stelle, Kennnummer 0045

TÜV Nord Systems GmbH & Co. KG
Große Bahnstraße 31
D-22525 Hamburg

Tel. +49-(0) 40 8557-2706
Fax +49-(0) 40 8557-2187
e-mail skorn@tuev-nord.de

Mitglied der CEOC
CONFÉDÉRATION EUROPÉENNE D'ORGANISMES DE CONTRÔLE

A1 Rev. 2, 01.06

BA51 -10

SEE-BERUFSGENOSSENSCHAFT

EMDEN · BREMEN · BREMERHAVEN · HAMBURG · KIEL · WISMAR · ROSTOCK · STRALSUND

SCHIFFSSICHERHEITSABTEILUNG

Armaturen - Wolf
Friedrich H. Wolff GmbH & Co. KG
Oehleckerring 29
22419 Hamburg

Ansprechpartner / in:
Dipl.-Ing. Reiss

Telefon: 040/361 37 - 228
Telefax: 040/361 37 – 204
eMail: Dieter.Reiss@see-bg.de

Ihr Zeichen, Ihr Schreiben vom

Unser Aktenzeichen (bitte immer angeben)
II 78 -1- 9 Re /

Datum
10.09.2008

Engine Departement

Ref.: Electric Quick- Closing Valve Systems
(FSV Accutec II)

To Whom It May Concern
Attestation

Dear Sirs ,

Herewith confirmed the SEE-BERUFSGENOSSENSCHAFT as authorized Ship Safety Division in Germany that the Electric Quick - Closing Valve System by Firma ARMATUREN WOLFF, (TYP: FSV Accutec II) which has been type-approved by GERMANISCHER LLOYD , Admission Nr.: 58630 – 08 HH , can be deployed on German-flagged seagoing vessels.

With best regards
Ship Safety Division
b.o.

See-Berufsgenossenschaft
Schiffssicherheitsabteilung
Reimerstwiete 2
20457 Hamburg

(Reiss)

Hauptverwaltung
Reimerstwiete 2, 20457 Hamburg
Postfach 11 04 89, 20404 Hamburg
Tel. 040/36 13 7-0, FAX 040/36 13 77 70

Besuchszeiten
Mo. - Mi. 8.00 - 15.00 Uhr
Do. 8.00 - 18.00 Uhr
Fr. 8.00 - 13.30 Uhr

Bei Zahlungen bitte immer unser Aktenzeichen angeben
HSH Nordbank AG (BLZ 200 500 00) Nr. 103 911 000
Hamburger Sparkasse (BLZ 200 505 50) Nr. 1280/166 008
Postbank Hamburg (BLZ 200 100 20) Nr. 476 13- 200